版次 (Version)	变更内容 (Rev. Content)	变更者 (Change Person)

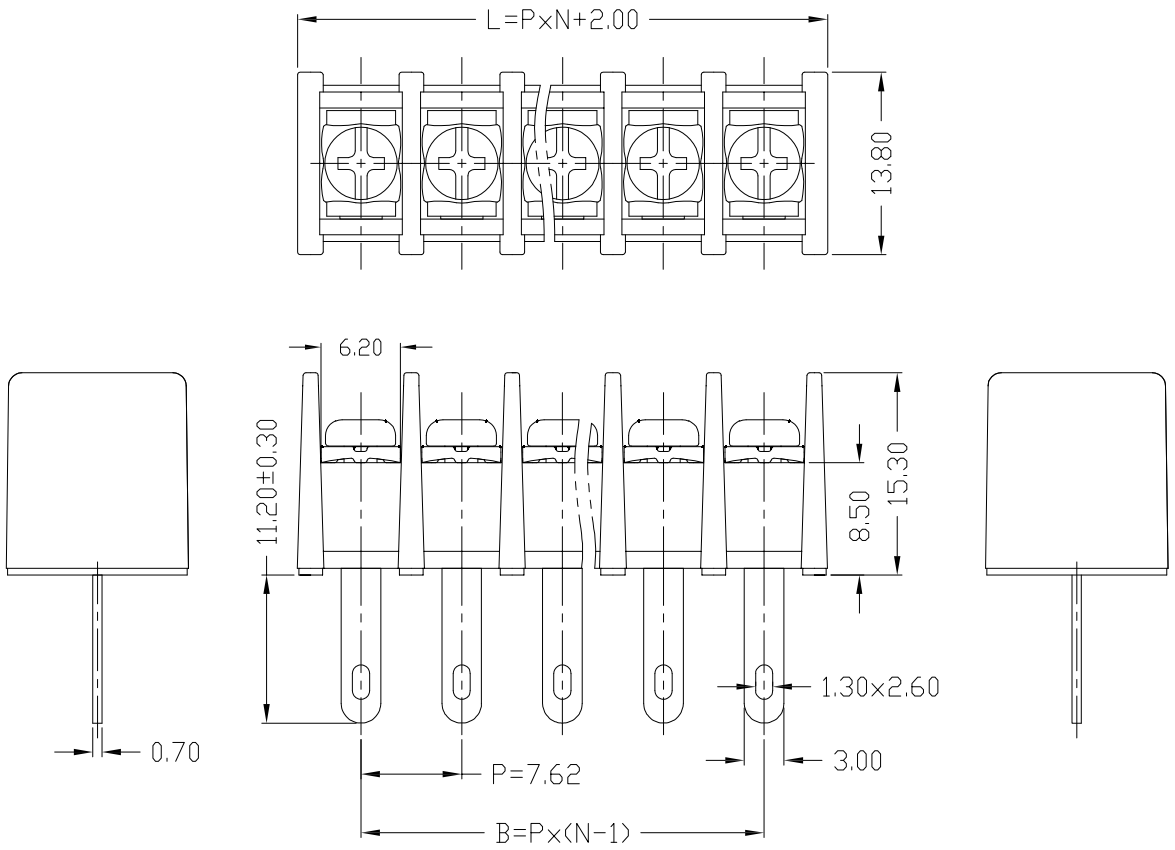

技术参数（Technical Data）				
UL	应用组别(Use group)	B	C	D
	额定电器参数 (Rated Electrical Parameters)	300V/15A	300V/15A	300V/15A
IEC	过压类别(Overvoltage Category) /污染等级(Pollution Degree)	III/3	III/2	II/2
	额定电器参数 (Rated Electrical Parameters)	320V/24A	320V/24A	320V/24A
压线范围(Wire Range)		22～14AWG 2.5mm²		
工频耐压(Frequency Voltage)		AC 2500V		
冲击耐压(Rated Surge Voltage)		4000V		
绝缘阻抗(Insulation Resistance)		DC500V 500MΩ above		
接触电阻(Contact Resistance)		≤8mΩ		
剥线长度(String Length)		6～7（mm）		
工作温度(Temperature)		-40° C～+105° C		
额定扭矩(Rated torque)		/		
材质和电镀(Material and plating)				
绝缘材质(Housing)		PA66 (UL94 V-0)		
导体材料(Contact)		铜合金，镀锡(Copper alloy, Sn plsted)		
/		/		

产品命名编码:
(Product Number Gode):

BT2.5-XX-762-25H - YY

- BT2.5: 系列(Series)
- XX: 极数(NO. of poles)
- 762: 端子间距(Pitch)
- 25H: 型号(Model)
- YY: 塑体颜色(Housing Color)

1:绿色(Green)	7:透明色 (Transparent)
2:蓝色(Blue)	8:白色(White)
3:黑色(Black)	9:黄色(Yellow)
4:灰色(Grey)	Y:多种颜色 (Mixed color)
5:橙色(Orange)	
6:红色(Red)	

P=7.62mm,N为孔位数(N for hole digits),有效位数为(Significant Digits):02p-24p

N	02P	03P	04P	05P	06P	07P	08P	09P	10P	11P	12P	13P
L	17.24	24.86	32.48	40.10	47.72	55.34	62.96	70.58	78.20	85.82	93.44	101.06
B	7.62	15.24	22.86	30.48	38.10	45.72	53.34	60.96	68.58	76.20	83.82	91.44
N	14P	15P	16P	17P	18P	19P	20P	21P	22P	23P	24P	
L	108.68	116.30	123.92	131.54	139.16	146.78	154.40	162.02	169.64	177.26	184.88	
B	99.06	106.68	114.30	121.92	129.54	137.16	144.78	152.40	160.02	167.64	175.26	

东莞市澳斯电子有限公司
DONGGUAN AOSI ELECTRONICS CO.,LTD

型号(Type): BT2.5-XX-762-25H-YY

核准(Approval): 图号(Drawing NO.):

核审(Audit): 单位(Units):mm 页码(Page):1/1

设计(Design) 比例(Scale):FULL

公差范围(Tolerance Range)		
150~		±1.50
60~150		±1.00
30~60		±0.60
6~30		±0.40
0~6		±0.25
角度 (Angle)	X	±2°
	X.X	±1°

版次(Version):T0